CHƯƠNG 3
MẠCH DAO ĐỘNG & TỔNG HỢP TẦN SỐ

1. Caùc vaán ñeà chung veà maïch dao ñoäng

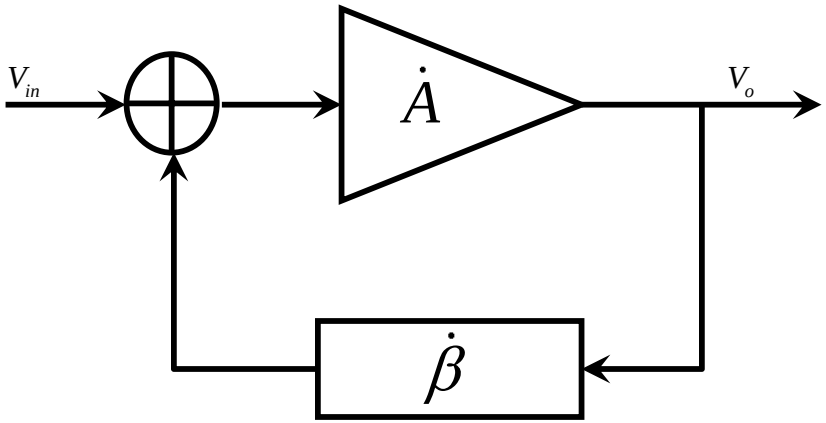

$$\dot{A} = A.e^{j\varphi_A}$$

$$\dot{\beta} = \beta.e^{j\varphi_\beta}$$

$$\Rightarrow \dot{A}_{ht} = \frac{\dot{A}}{1-\dot{\beta}\dot{A}}$$

Ñieàu kieän ñeå duy trì dao ñoäng:

$$\dot{\beta}\dot{A} = +1$$

$$\dot{\beta}\dot{A} = \beta A.e^{j(\varphi_A+\varphi_\beta)} = 1 \Rightarrow \begin{cases} \beta A \geq 1 \\ \varphi = \varphi_A + \varphi_\beta = 2n.\pi \end{cases}$$

: Ñieàu kieän bieân ñoä

: Ñieàu kieän pha

* OÅn ñònh bieân ñoä

- Haïn bieân thoâng qua vieäc choïn aùp nguoàn phuø hôïp.
- Söû duïng phaàn töû phi tuyeán (diode) ñeå haïn bieân

* OÅn ñònh taàn soá

- Ñoä baát oån ñònh taàn soá: $$\varepsilon = \frac{\Delta f}{f_0}$$

- Ñeå taêng ñoä oån ñònh taàn soá :

  ✓ Choïn caáu hình maïch coù ñoä oån ñònh taàn soá cao.

  ✓ Choïn heä soá phaåm chaát Q cuûa khung coäng höôûng lôùn.

  ✓ Giaûm thieåu söï ñoùng goùp thaønh phaàn khaùng cuûa caùc ñieän dung kyù sinh trong khung coäng höôûng.

  ✓ Choïn caùc phaàn töû maïch coù heä soá nhieät thaáp hoaëc coù heä soá nhieät buø nhau.

  ✓ Giaûm aûnh höôûng cuûa taûi leân maïch dao ñoäng baèng caùch theâm caùc taàng khueách ñaïi ñeäm.

2. Maïch dao ñoäng LC duøng transistor

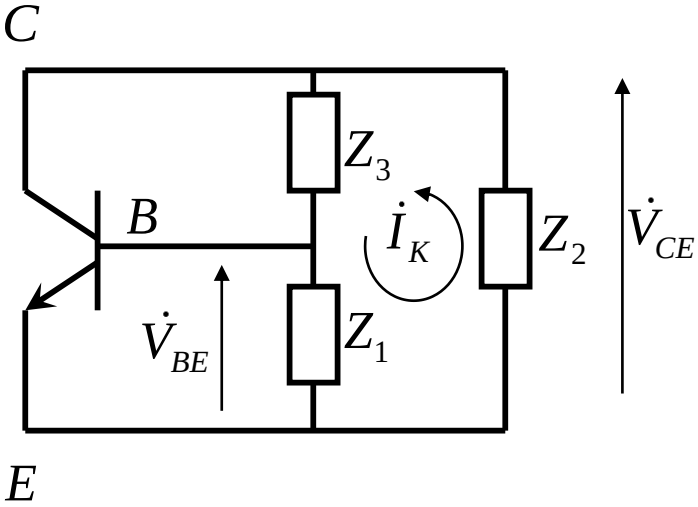

$$X_1 + X_2 + X_3 = 0$$

$$\dot{\beta} = \frac{\dot{V}_{BE}}{\dot{V}_{CE}}$$

$$\frac{\dot{V}_{BE}}{\dot{V}_{CE}} \approx \frac{\dot{I}_K . jX_1}{-\dot{I}_K . jX_2} = \frac{-X_1}{X_2} = \frac{X_1}{X_1 + X_3}$$

Vôùi : $\dot{A} = -A < 0$

Maø ñieàu kieän ñeå dao ñoäng: $\dot{\beta}\dot{A} = +1$

$\Rightarrow \dot{\beta} < 0$

Töùc laø: X_1, X_2 : cuøng daáu; X_3 : Traùi daáu vôùi X_1, X_2

Maïch 3 ñieåm ñieän caûm: $X_1, X_2 > 0;\ X_3 < 0$

Maïch 3 ñieåm ñieän dung: $X_1, X_2 < 0;\ X_3 > 0$

❖ Maïch 3 ñieåm ñieän caûm (Hartley)

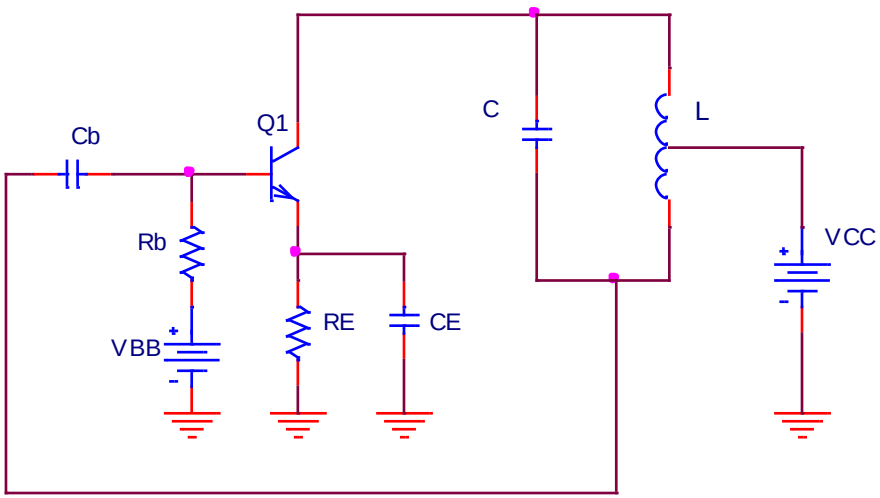

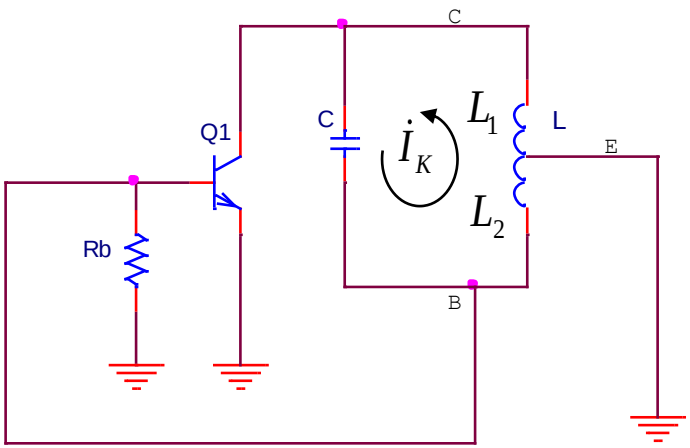

Ñieàu kieän veà pha thoûa do:

$$X_1 = X_{BE} = \omega L_2 > 0$$

$$X_2 = X_{CE} = \omega L_1 > 0$$

$$X_3 = X_{CB} = -\frac{1}{\omega C} < 0$$

$$M = k\sqrt{L_1 L_2}$$

$$\dot{\beta} = \frac{\dot{V}_{BE}}{\dot{V}_{CE}} = \frac{\dot{I}_K . j\omega(L_2 + M)}{-\dot{I}_K . j\omega(L_1 + M)} = -\frac{L_2 + M}{L_1 + M}$$

- Neáu L1, L2 cuøng loõi:

$$\dot{\beta} = \frac{\dot{V}_{BE}}{\dot{V}_{CE}} = -\frac{L_2 + M}{L_1 + M} \qquad M = k\sqrt{L_1 L_2}$$

$$L_1 = \alpha.n_1^2;\ \ L_2 = \alpha.n_2^2$$

$$\Rightarrow \dot{\beta} = -\frac{\alpha.n_2^2 + k.\alpha.n_1.n_2}{\alpha.n_1^2 + k.\alpha.n_1.n_2} \qquad \Rightarrow \dot{\beta} = -\frac{n_2(n_2 + kn_1)}{n_1(n_1 + kn_2)} = \frac{\dot{V}_{BE}}{\dot{V}_{CE}}$$

o Neáu L1, L2 gheùp chaët:

$$k = 1 \qquad \Rightarrow \dot{\beta} = -\frac{n_2}{n_1} = \frac{\dot{V}_{BE}}{\dot{V}_{CE}}$$

- Neáu L1, L2 khaùc loõi:

$$\dot{\beta} = \frac{\dot{V}_{BE}}{\dot{V}_{CE}} = -\frac{L_2}{L_1}$$

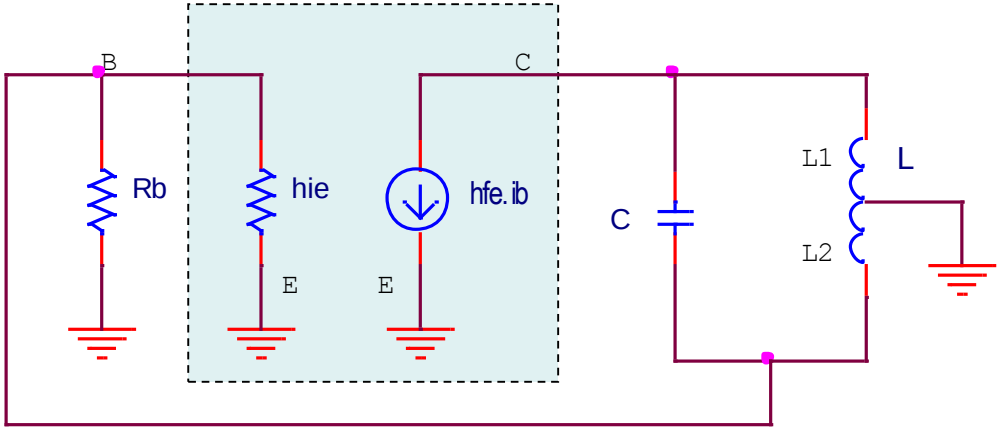

$$\dot{A} = \frac{\dot{V}_{CE}}{\dot{V}_{BE}} = \frac{-h_{fe}.i_b.R_C}{i_b.h_{ie}} = \frac{-h_{fe}}{h_{ie}} R_C$$

$$\frac{\dot{V}_{EB}}{\dot{V}_{CE}} = \frac{n_2(n_2 + kn_1)}{n_1(n_1 + kn_2)} = n$$

$$R_C = \frac{(R_b // h_{ie})}{n^2}$$

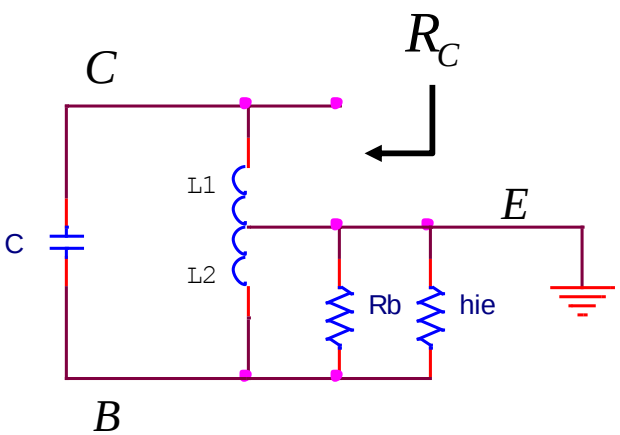

Ñieàu kieän veà bieân ñoä:

$$\beta A \geq 1 \Rightarrow n.\frac{h_{fe}}{h_{ie}} \frac{(R_b // h_{ie})}{n^2} \geq 1$$

$$\Rightarrow n \leq \frac{h_{fe}}{h_{ie}} (R_b // h_{ie})$$

Maïch dao ñoäng 3 ñieåm ñieän caûm (B chung)

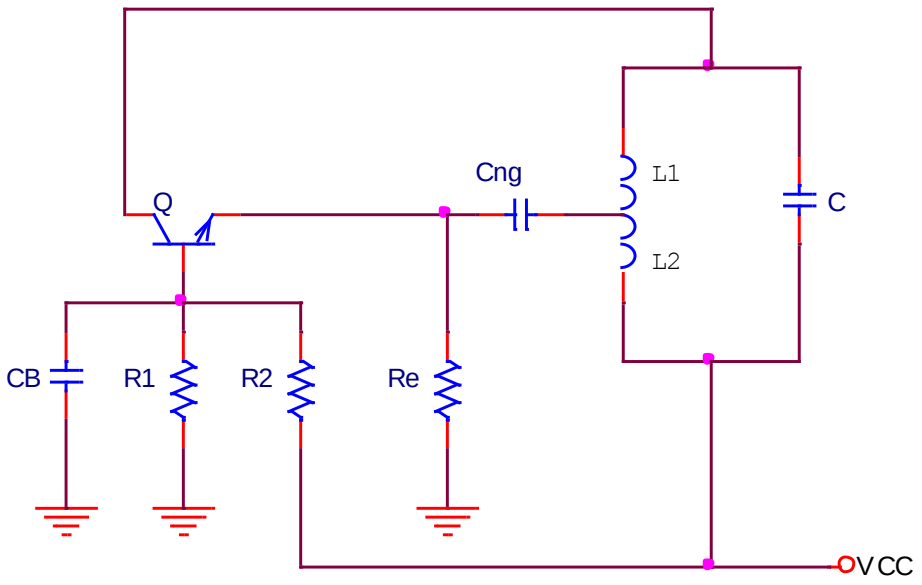

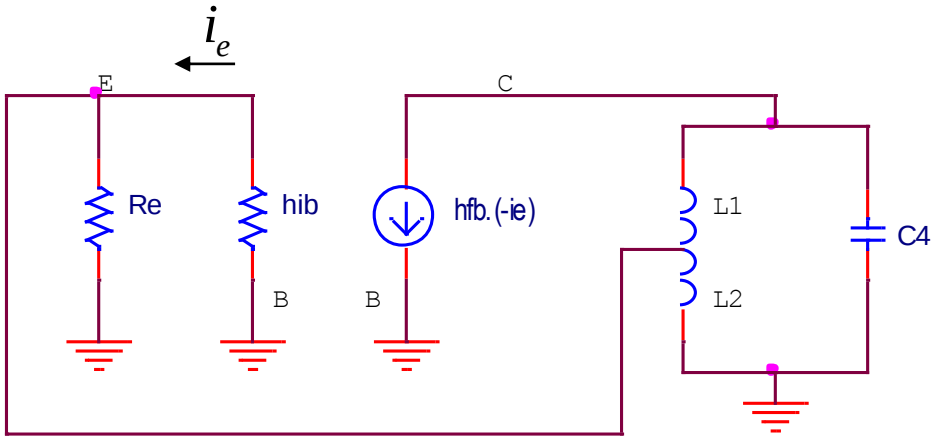

❖ Maïch 3 ñieåm ñieän dung (Colpits)

Maïch E chung:

$$\dot{\beta} = \frac{\dot{V}_{BE}}{\dot{V}_{CE}} = -\frac{C_1}{C_2} = -n$$

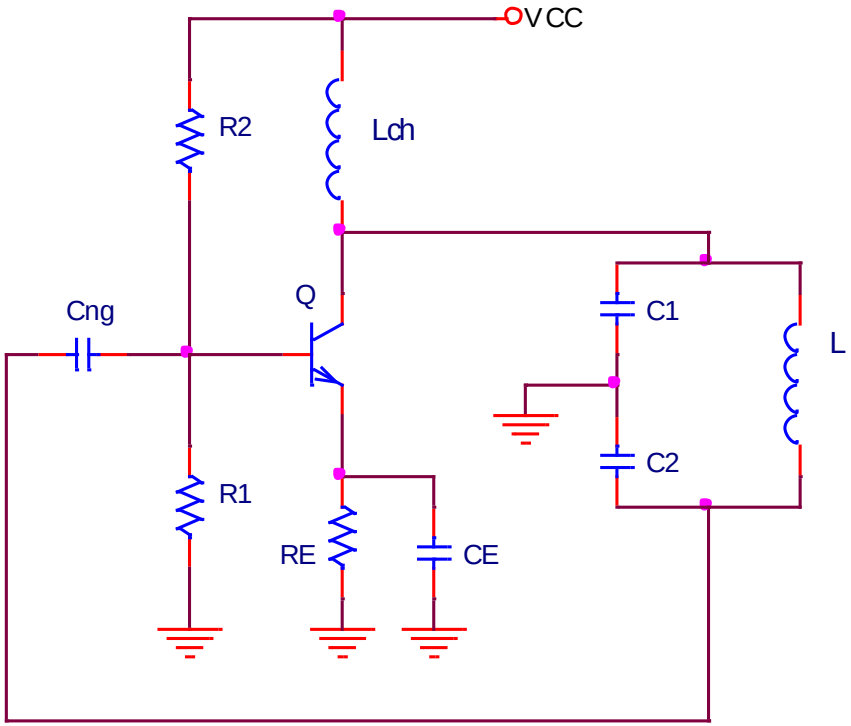

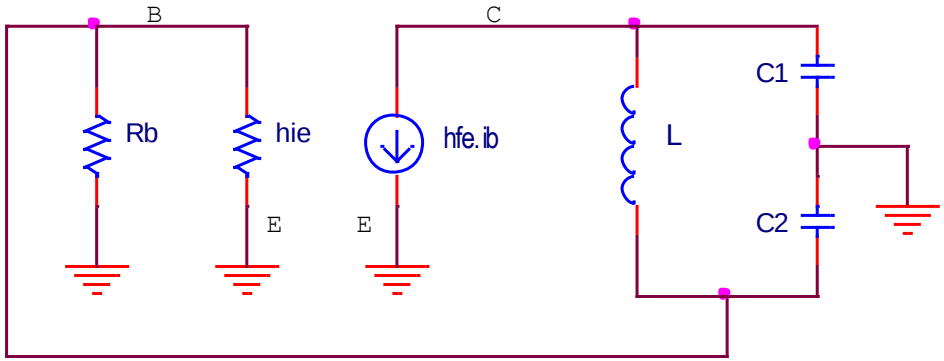

Maïch B chung:

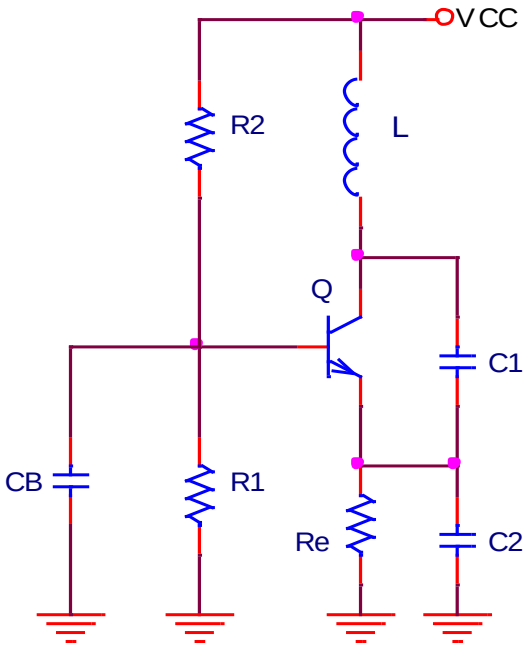

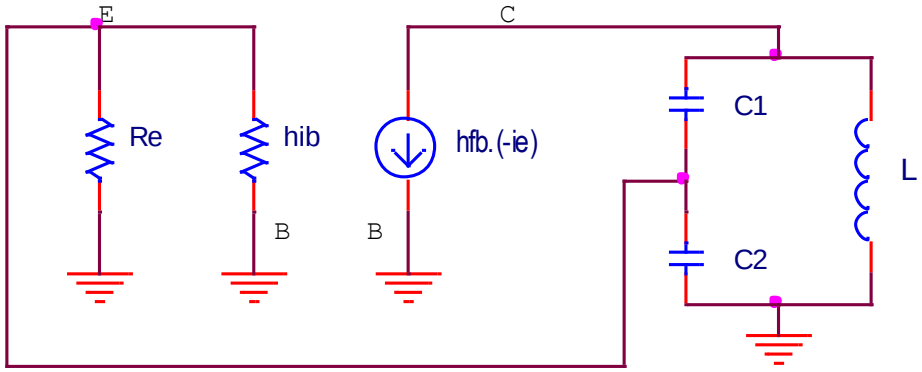

Maïch C chung:

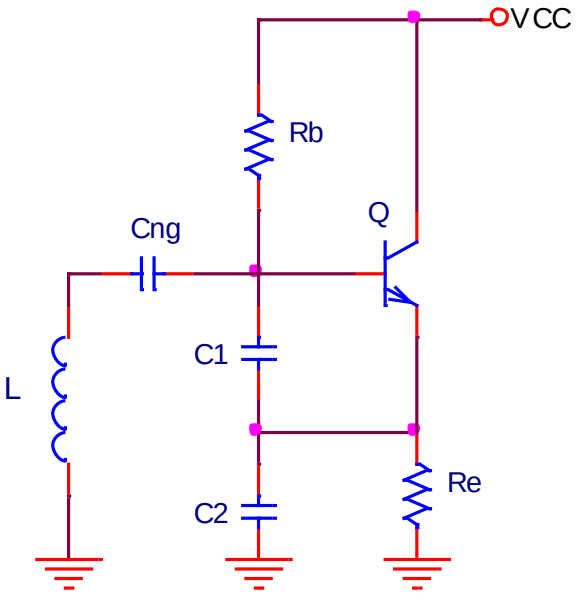

❖ Maïch dao ñoäng clapp

- L, C_0 coù taùc duïng nhö moät caûm khaùng trong khung coäng höôûng
- $C_0 \square C_1, C_2$
- L, C_0 quyeát ñònh taàn soá coäng höôûng

$$f_0 = \frac{1}{2\pi\sqrt{LC}} \approx \frac{1}{2\pi\sqrt{LC_0}}$$

$$\varepsilon_{clapp} \approx 10^{-4} \square \quad \varepsilon_{Colpits} \approx \varepsilon_{Harley} \approx 10^{-2} \div 10^{-3}$$

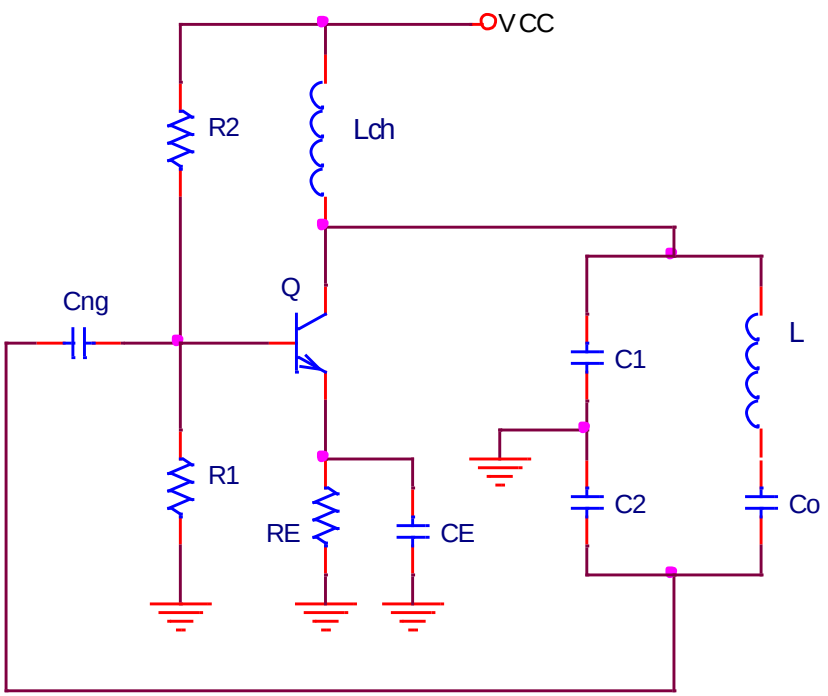

3. Maïch dao ñoäng thaïch anh

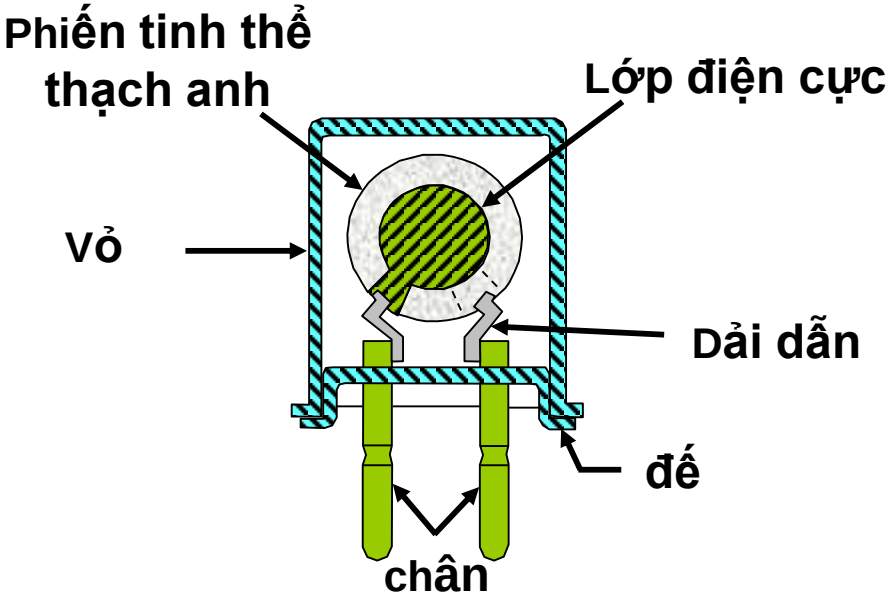

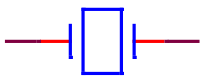

CRYSTAL

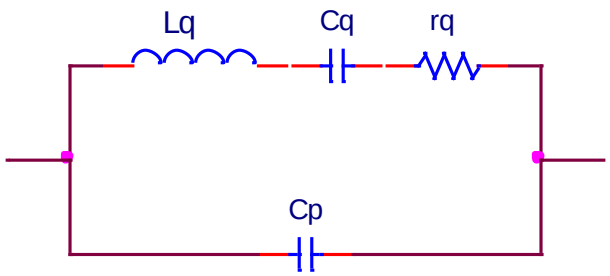

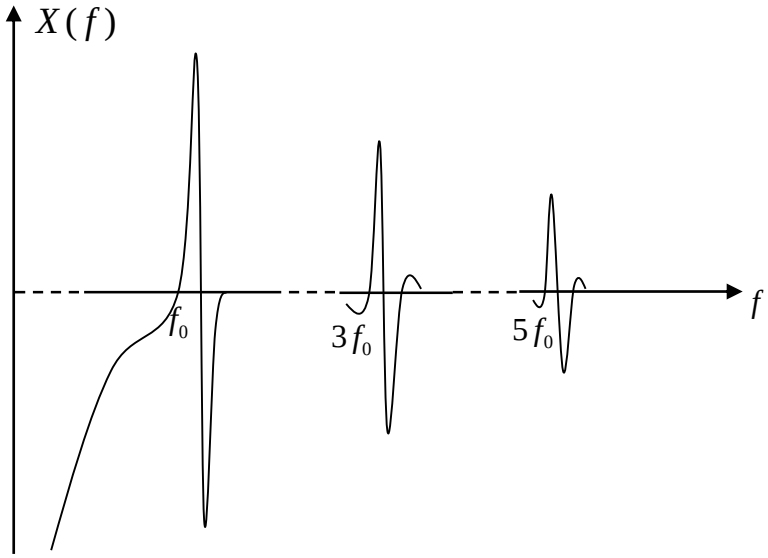

$$\varepsilon_{crystal} \approx 10^{-6} \div 10^{-10}$$

$$r_q \approx 0$$

$$Z \approx jX = j\frac{\omega^2 L_q C_q - 1}{\omega\left(C_p + C_q - \omega^2 L_q C_p C_q\right)}$$

$$\omega_q = \frac{1}{\sqrt{L_q C_q}}$$

$$\omega_p = \frac{1}{\sqrt{L_q \dfrac{C_q C_p}{C_q + C_p}}} \qquad \omega_p = \omega_q \sqrt{1 + \frac{C_q}{C_p}} \qquad C_q \ll C_p \qquad \Rightarrow \omega_p \approx \omega_q \left(1 + \frac{C_q}{2C_p}\right)$$

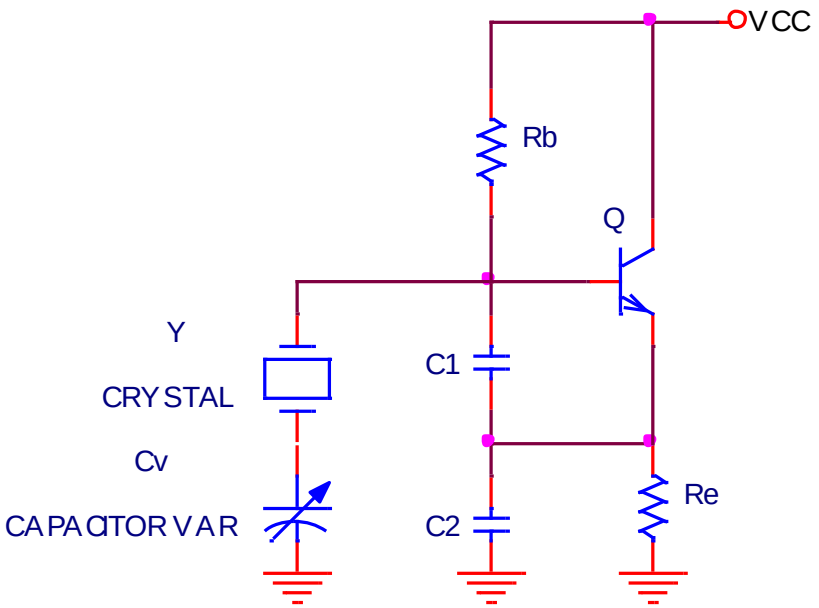
VCC
Rb
Q
Y
CRYSTAL
C1
Cv
CAPACITOR VAR
C2
Re

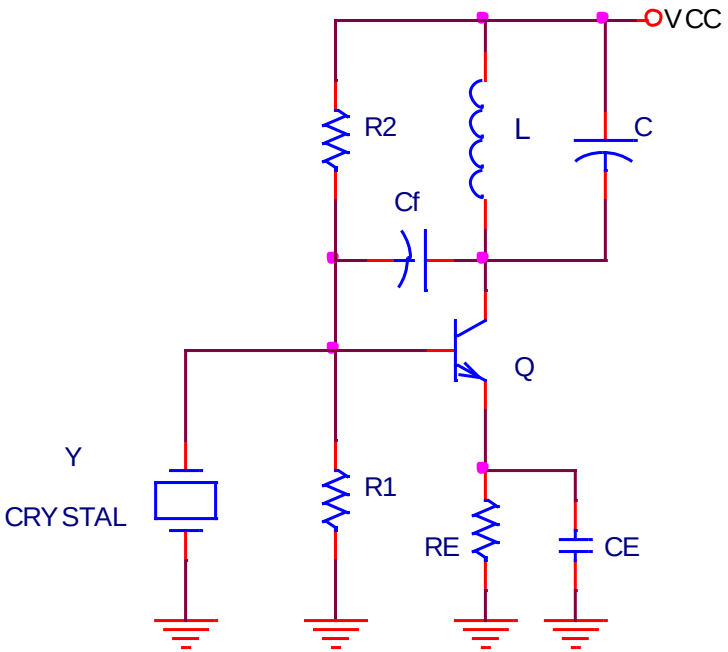
VCC
R2
L
C
Cf
Q
Y
CRYSTAL
R1
RE
CE

4. VCO (voltage controlled oscilator)

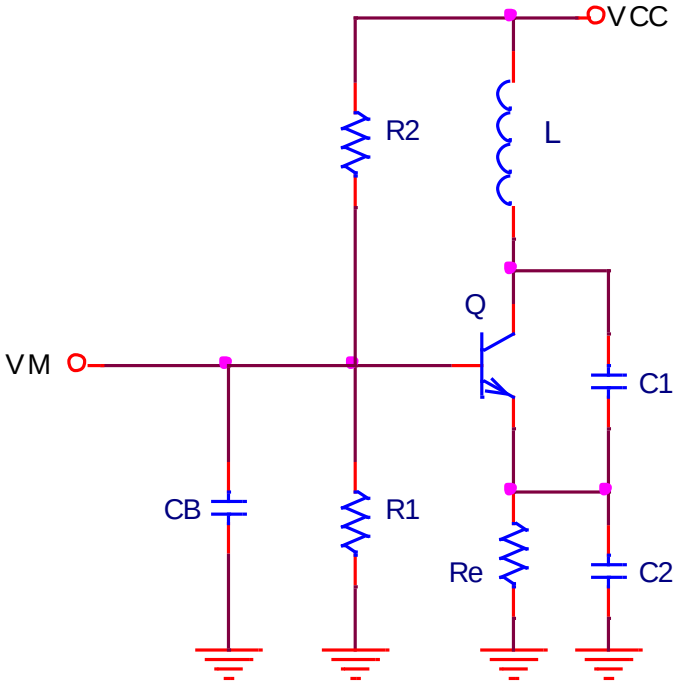

STVD901J

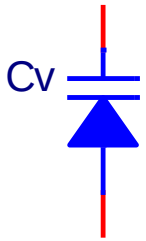

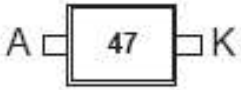

SOD-323

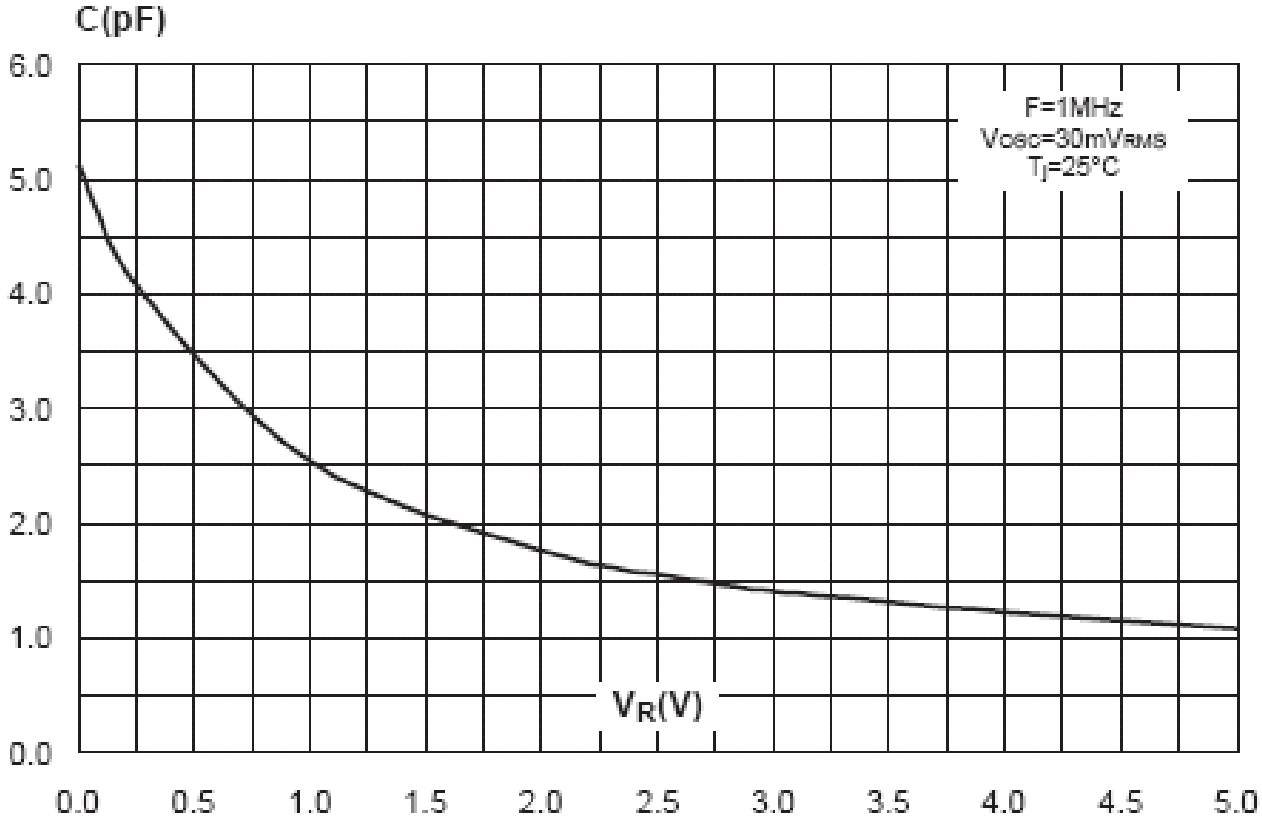

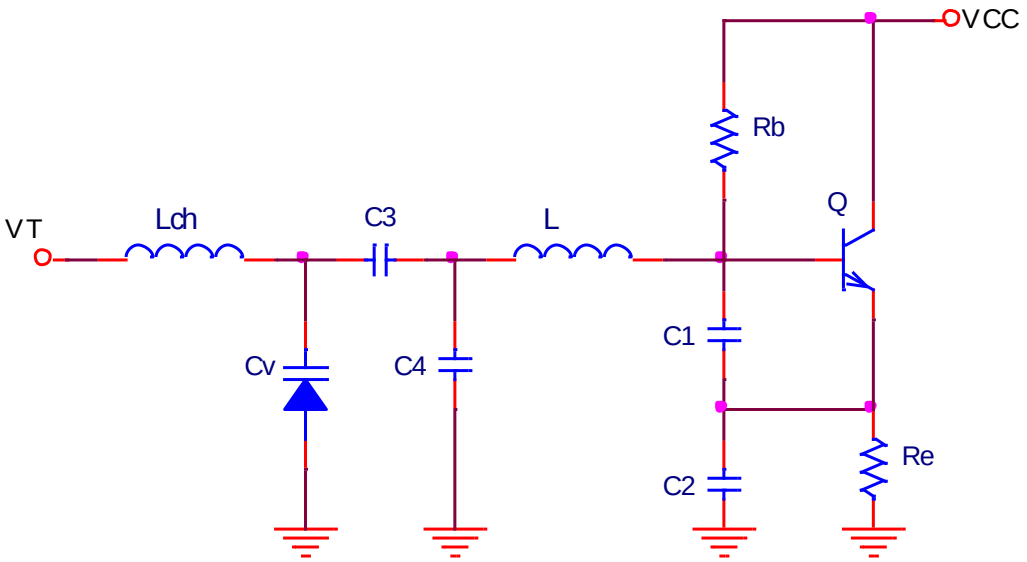
VCC
Rb
Q
VT
Ldh
C3
L
C1
Cv
C4
Re
C2

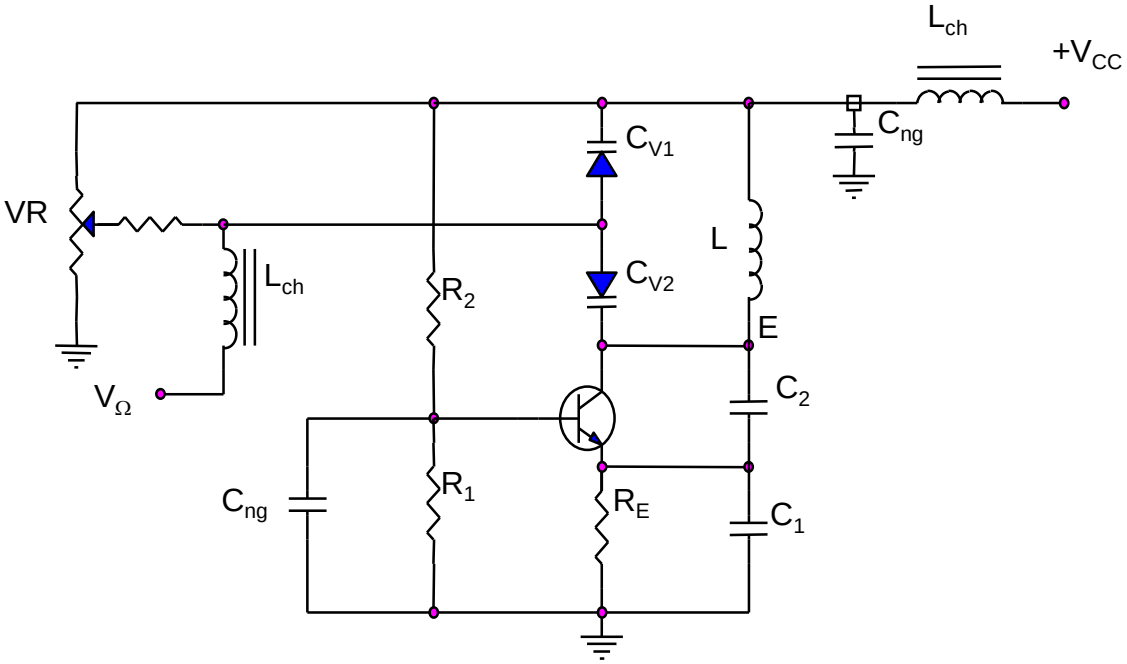
Lch
+VCC
Cng
CV1
VR
L
Lch
R2
CV2
E
VΩ
C2
Cng
R1
RE
C1

5. PLL (phase locked loop – voøng khoaù pha)

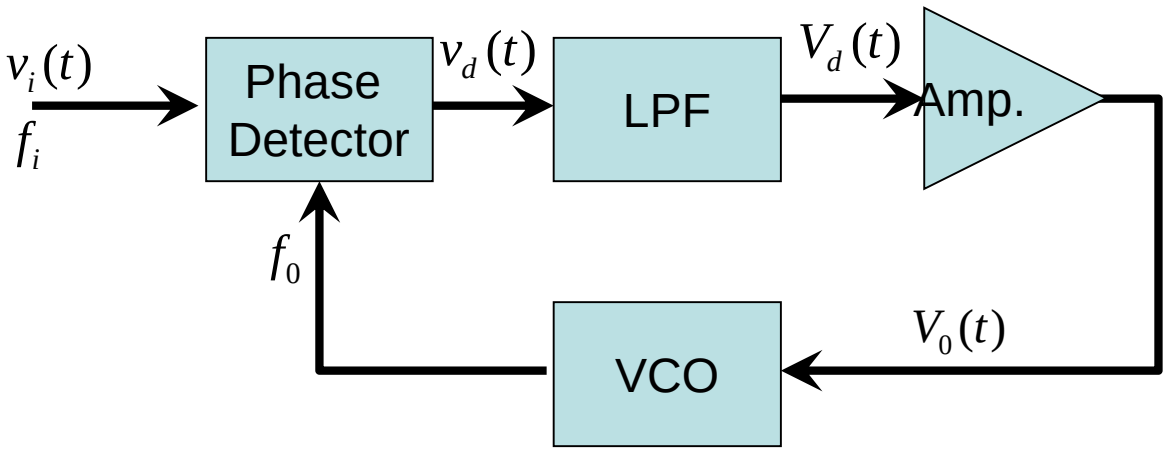

- Daûi khoaù (lock range) B_L: laø daûi taàn soá laân caän taàn soá dao ñoäng töï nhieân cuûa VCO (f_N) maø PLL coøn coù theå ñoàng nhaát ñöôïc taàn soá f_0 vôùi f_i

Daûi khoaù phuï thuoäc haøm truyeàn ñaït cuûa boä so pha, boä khueách ñaïi vaø VCO, khoâng phuï thuoäc vaøo baêng thoâng cuûa boä löïa chöïa thaấp.

- Daûi baét (capture range) B_C : laø daûi taàn soá laân caän taàn soá dao ñoäng töï nhieân cuûa VCO (f_N) maø ban ñaàu taàn soá f_i phaûi loït vaøo ñeå PLL coù theå thieát laäp cheá ñoä ñoàng boä.

Daûi baét phuï thuoäc nhieàu vaøo daûi thoâng boä LPF, sai leäch taàn soá giöõa f_o, f_i khoâng ñöôïc vöôït quaù baêng thoâng cuûa boä LPF.

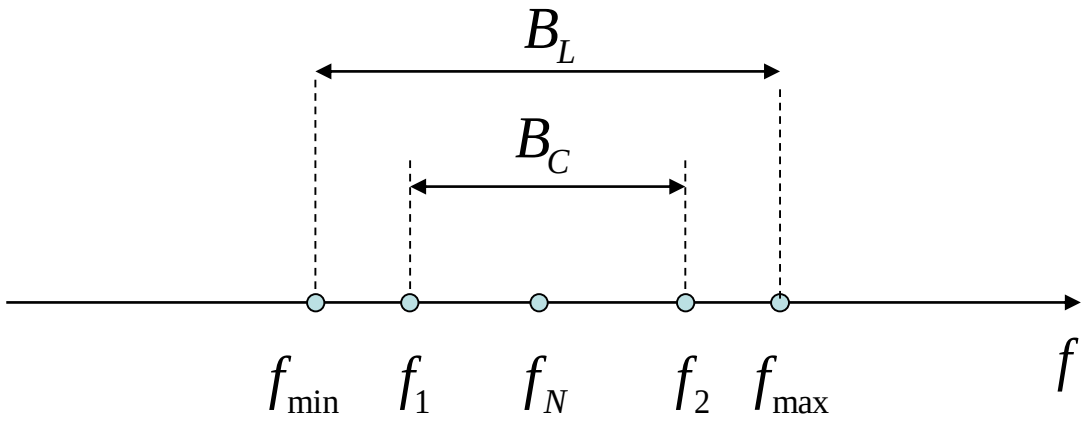

- Boä so pha (phase detector):
  - Boä so pha Töông töï: laø boä nhaân hay mixer

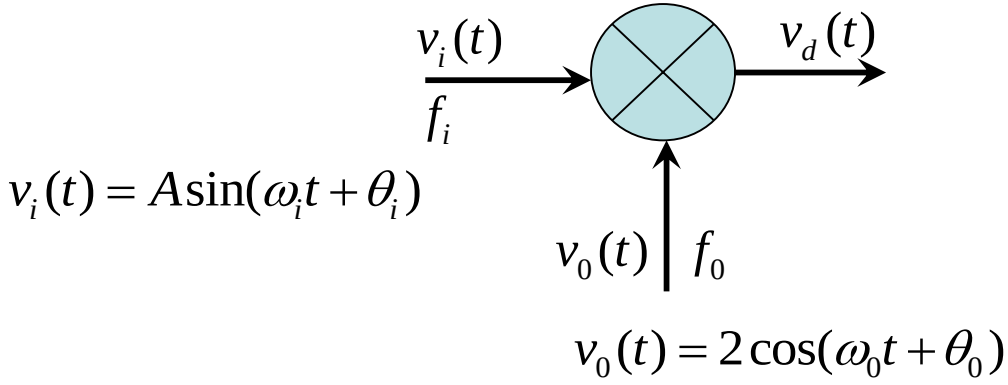

$$v_d(t) = A\sin\left[(\omega_i t + \theta_i) - (\omega_0 t + \theta_0)\right] + A\sin\left[(\omega_i t + \theta_i) + (\omega_0 t + \theta_0)\right]$$

Qua boä loïc thoâng thaáp (LPF):

$$V_d(t) = A\sin\left[(\omega_i t + \theta_i) - (\omega_0 t + \theta_0)\right] \qquad V_d(t) = A\sin\left[(\omega_i - \omega_0)t + (\theta_i - \theta_0)\right]$$

Khi pha ñaõ ñöôïc khoaù:

$$\omega_i = \omega_0 \qquad \Rightarrow V_d(t) = A\sin\left[\theta_i - \theta_0\right]$$

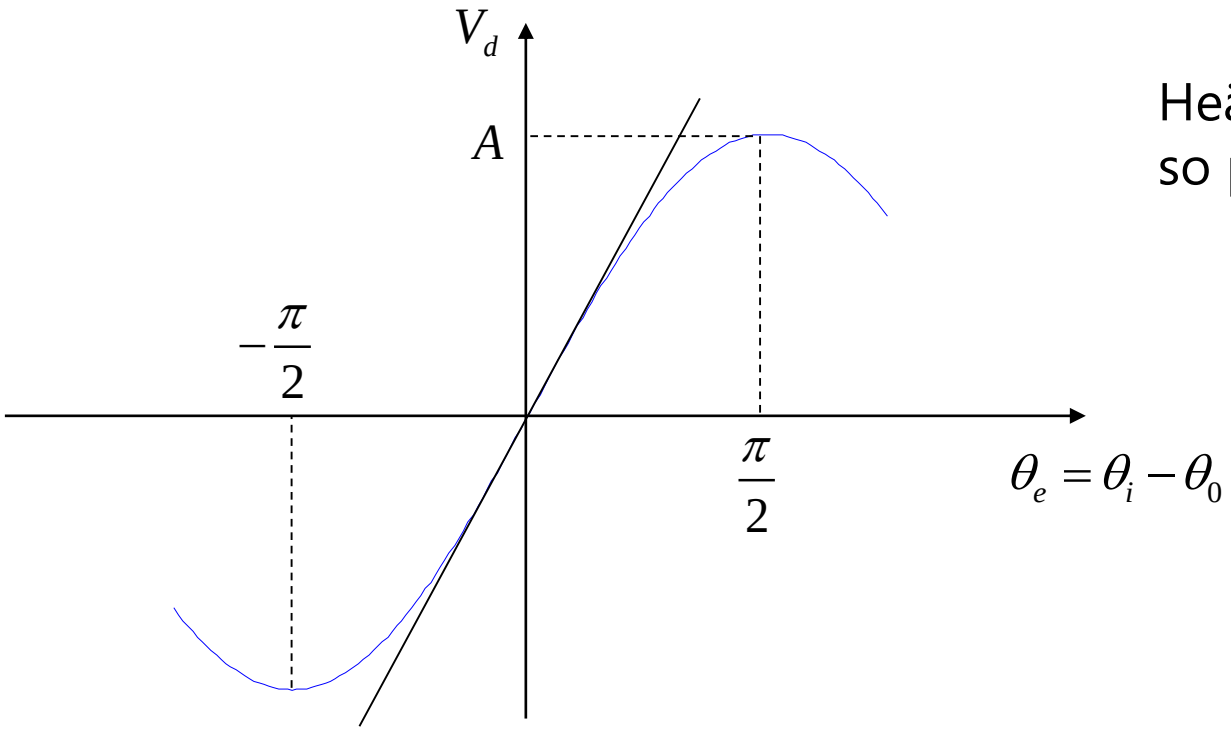

Heä soá ñoä lôïi boä so pha:

$$\Rightarrow K_\phi \approx A \quad (V/rad)$$

$$\left(V_d \approx K_\phi(\theta_i - \theta_0)\right)$$

Boä so pha soá: duøng coång AND, XOR hoaëc SR flip flop…

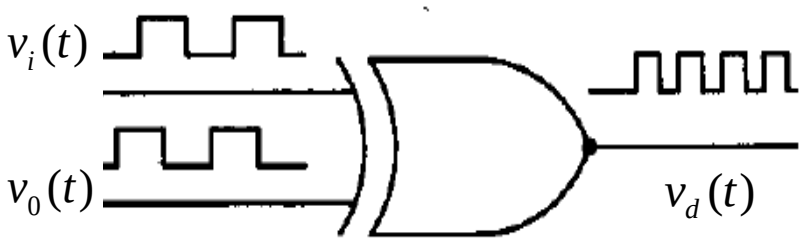

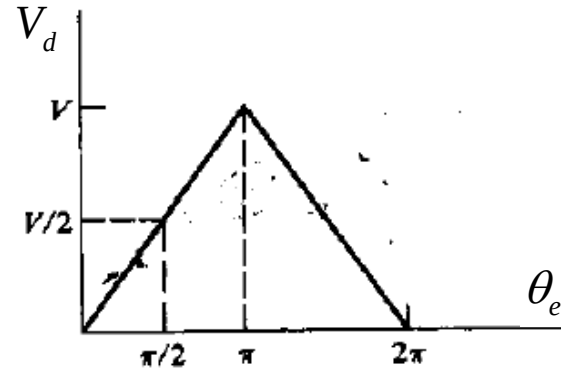

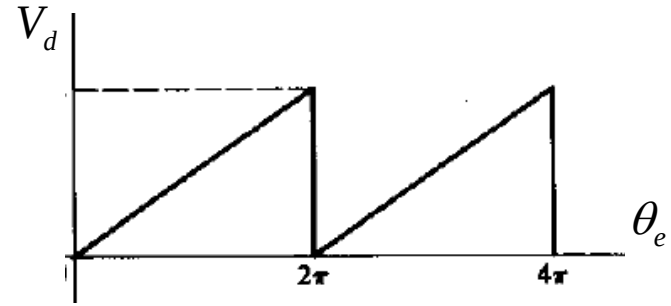

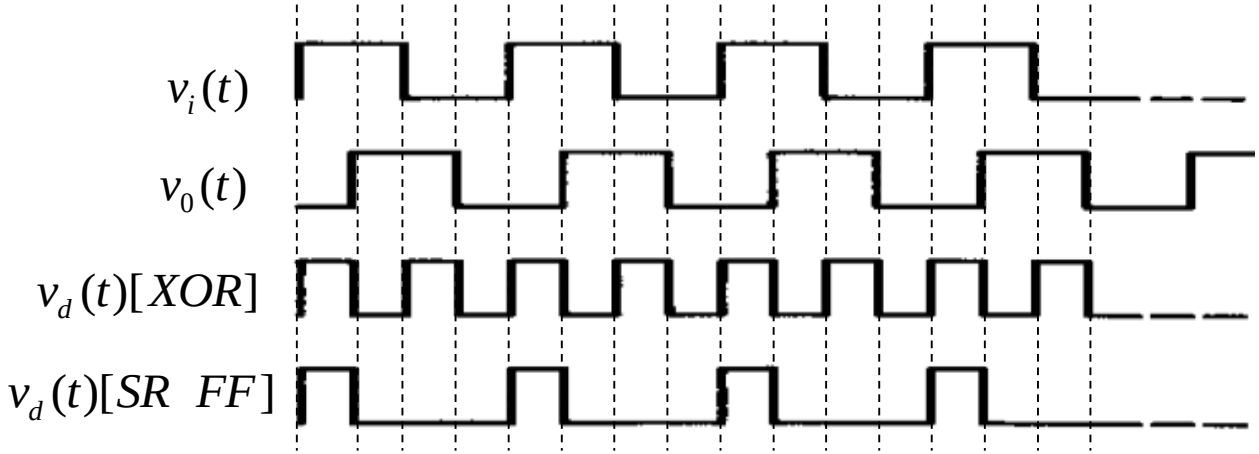

- Boä loïc thoâng thaáp (PLL): thöôøng duøng boä loïc thuï ñoäng RC baäc 1
- Boä khueách ñaïi (Amp.) : laøm taêng ñoä nhaïy cuûa PLL, ñaùp öùng cho caû DC
- VCO: taïo tín hieäu coù taàn soá f_0 vaø taàn soá thay ñoåi khi aùp ñieàu khieån thay ñoåi. Thöôøng ñaëc tuyeán quan heä giöõa f_0 vaø V_0 ñöôïc quan taâm.

Heä soá chuyeån ñoåi: $K_0 \approx \frac{\Delta f_0}{\Delta V_0} \quad [Hz/V]$

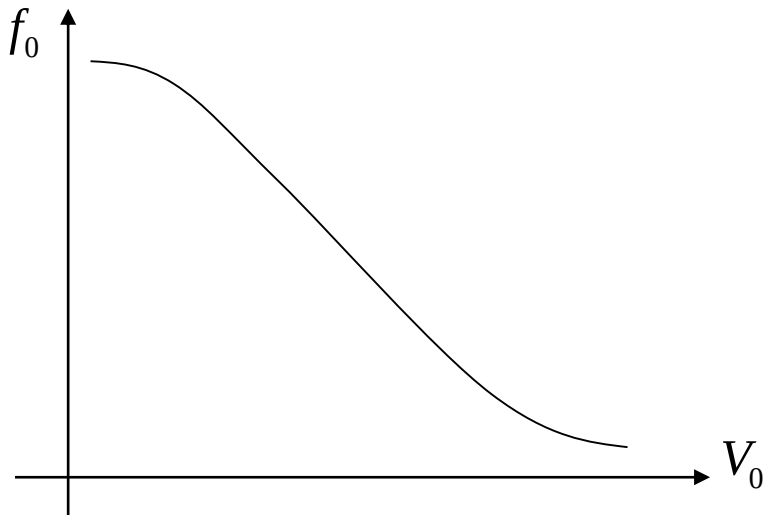

ÖÙng duïng cuûa voøng khoaù pha

- Ñieàu cheá bieân ñoä (AM), ñieàu cheá taàn soá (FM), ñieàu cheá pha (PM).
- Giaûi ñieàu cheá taàn soá (FM), giaûi ñieàu cheá bieân ñoä (AM).
- Ñoàng boä vaø phuïc hoài soùng mang.
- Toång hôïp taàn soá.

Toảng hôïp taàn soá

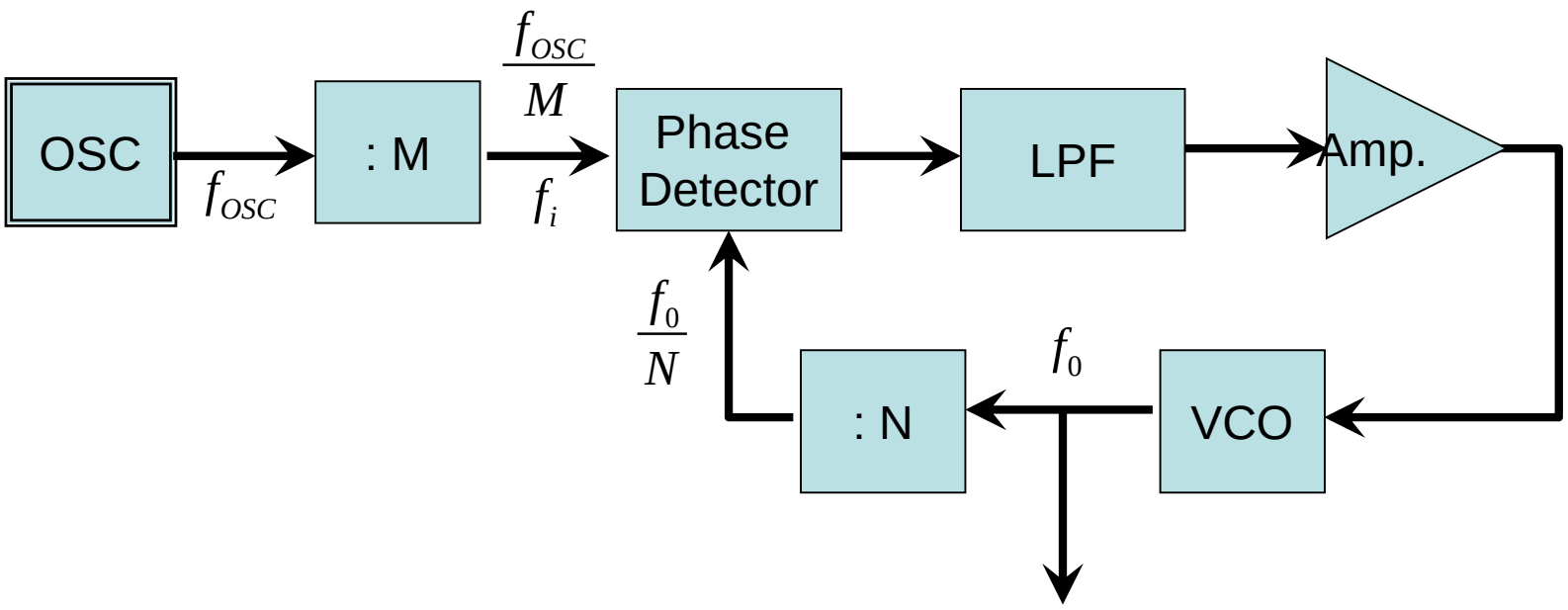

$$f_0 = \frac{N}{M} f_{OSC}$$

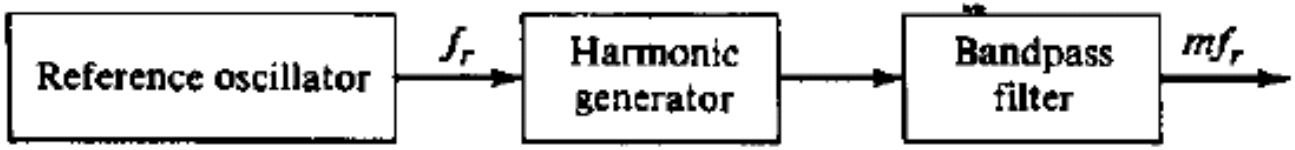
Reference oscillator
f_r
Harmonic generator
Bandpass filter
mf_r

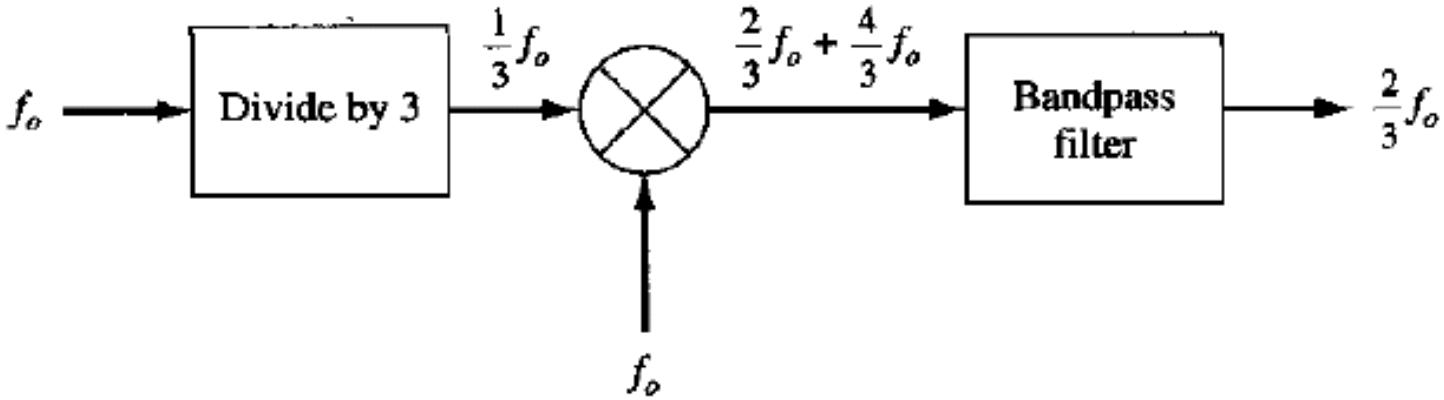
f_o
Divide by 3
$\frac{1}{3}f_o$
$\frac{2}{3}f_o + \frac{4}{3}f_o$
Bandpass filter
$\frac{2}{3}f_o$
f_o

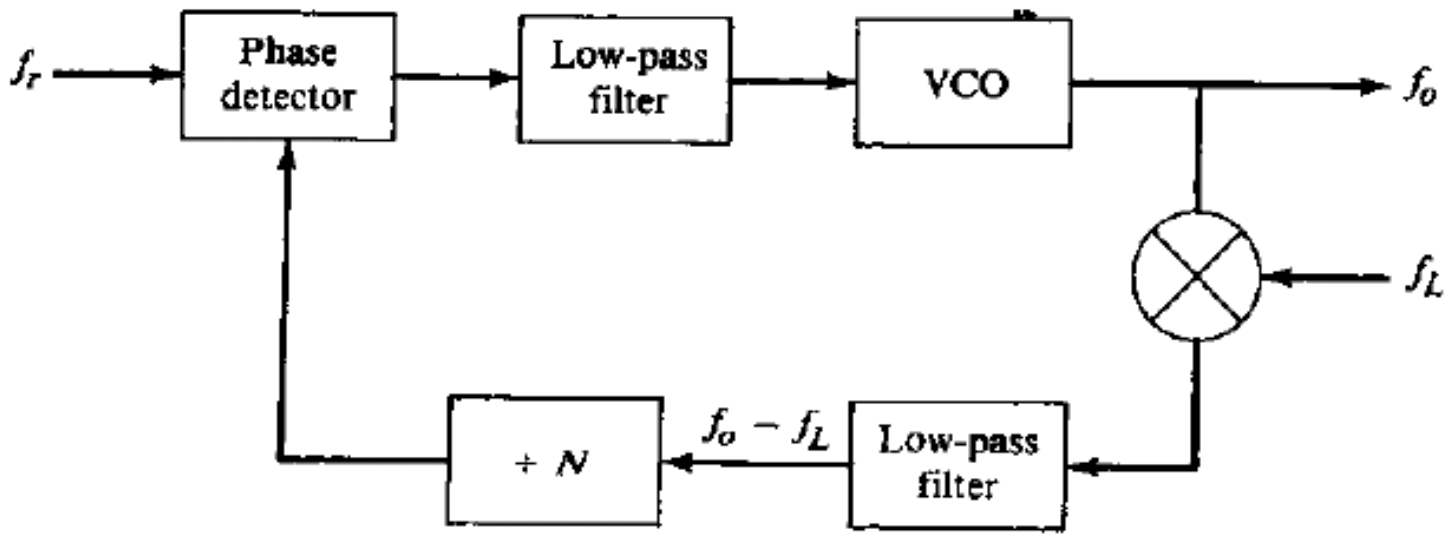

FIGURE 10.12
A PLL frequency synthesizer with down conversion.